Commercial Production from **Q3 2018**

The LS3150 high output linear inground brings together the best Lumascape technology in a simple yet stylish linear form factor with a bezel-less edge to edge glass finish. With ±15° tilt adjustment, the LS3150 is a versatile, high performance lighting instrument. It's available with white, colour changing and tuneable white light engines and features industry leading EasyGlow™ visual comfort technology. PowerSync™ digital control technology (onboard all next generation luminaires) suits both highly granular DMX/RDM control requirements and standard white light dimming via common protocols. All Linear Ingrounds are built to the high quality standards Lumascape is renowned for. Fixtures can be installed end to end for continuous linear lighting. Industry leading CoolDrive™ thermal management technology features in all next generation Lumascape luminaires.

Performance

Static White & Colour	Lumen Output (lm)	Efficacy (lm/W)	Peak Intensity (cd)
2,700 K (80 CRI)	5,435	61	229,400
3,000 K (80 CRI)	5,729	69	253,300
3,500 K (80 CRI)	6,023	69	253,000
4,000 K (80 CRI)	6,316	71	262,800
5,000 K (70 CRI)	7,197	80	292,200
Red	2,096	-	-
Green	4,858	57	170,900
Blue	2,078	21	70,700

Static white lumen output values are based on 16W/ft, 4ft luminaire with 6° lens.

Dynamic Colour	Lumen Output (lm)	Efficacy (lm/W)	Peak Intensity (cd)
RGBA	3,555	-	-
RGBW	3,837	-	-
RGB(1)	-	-	-

Dynamic colour lumen output values based on 16W/ft, 4 ft luminaire with 6° lens.
(1) RGB available on request.

Tunable White	Lumen Output (lm)	Efficacy (lm/W)	Peak Intensity (cd)
2,700 K - 6,500 K	6,316	-	-

Tunable white lumen output values based on 16W/ft, 4ft luminaire with 6° designer lens with all channels at 100%.

Intertek

humantouch™ powersync™ easyglow™ cooldrive™

Performance

Beam Angles	6°, 15°, 30°, 45°, 60°, 40° x 10°, 60° x 10°, 40° x 20°, 60° x 20°

Electrical

LED Power	16W/ft
Consumption	24W/ft maximum
Lifetime [L70]	>60,000 hrs [B10, L70, TM21]
Input Voltage	120-277V, 50/60Hz
Thermal Management	CoolDrive™ onboard thermal monitoring and control.

Control

Interface	Lumascape PowerSync™
Protocols	DMX/RDM, Artnet, PWM[1], 0-10V [sink or source][1] Some protocols require additional hardware. For details and for other available protocols contact factory. 1. Not available for Colour Changing
PWM Frequency	2,000Hz flicker free dimming to 0.1%
Systems	Range of third-party controllers

Physical

Housing	Extruded aluminum, tempered glass.
Finish	Superior 9-step powder-coating process, including marine epoxy undercoat and polyester top coat.
Installation	Pre-installation
Adjustable	±15° Tilt
Ambient Operating Temperature	-40°C to 50°C [-40°F to 122°F]
Surface Temperature	≤50°C [122°F] | 16W/ft
Weight	4' section - 6.7kg [14.8lb]

Certification & Compliance

IP Rating	IP66 / IP67 [IP68 Tested]
IK Rating	IK 9
Environment	Dry, Damp, Wet locations [Not suitable for underwater applications]
Certifications	ETL, CE, RCM, CCC [Pending]

Luminaire Dimensions (No Stainless Steel Trim)

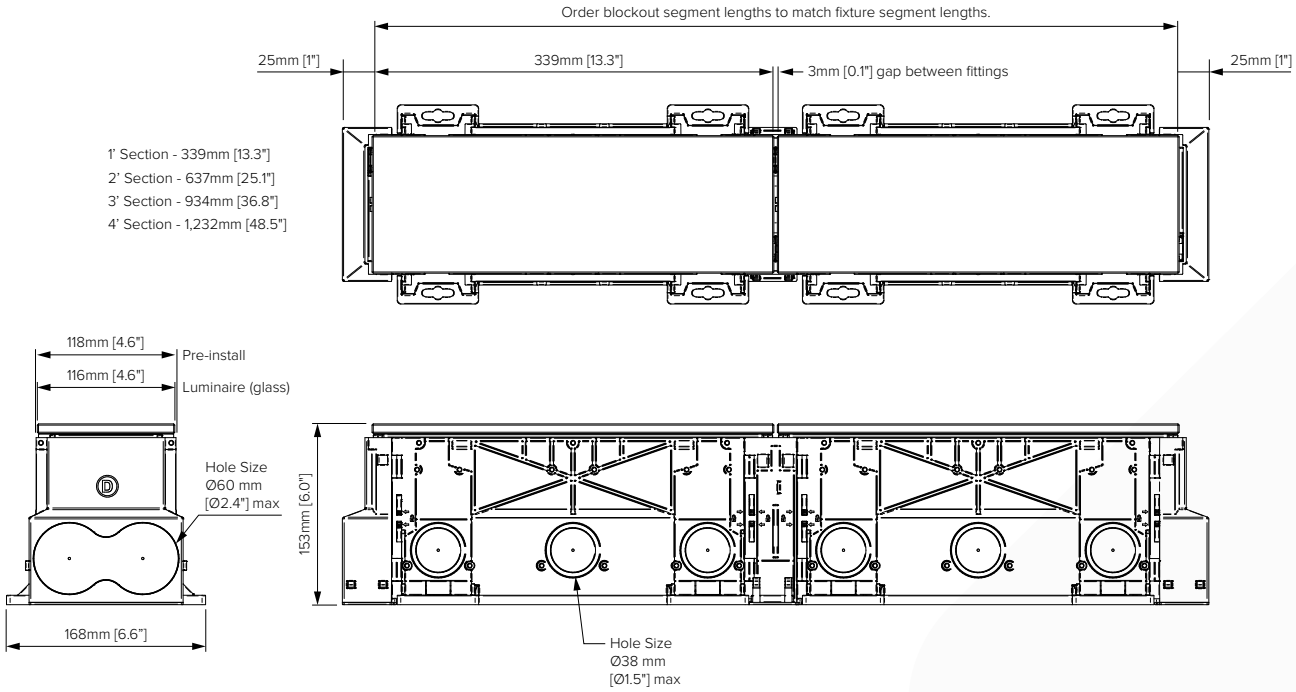

Installation

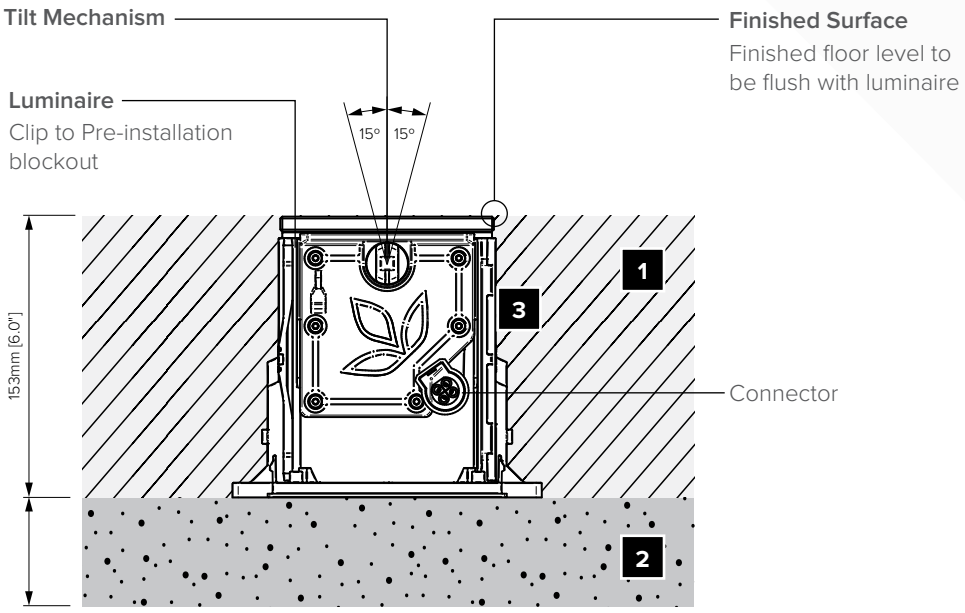

Installed Niche

1. Gravel / Fill
2. Draining Aggregate
3. Niche Assembly

*Refer to installation instructions for more information.

Luminaire Dimensions (With Stainless Steel Trim)

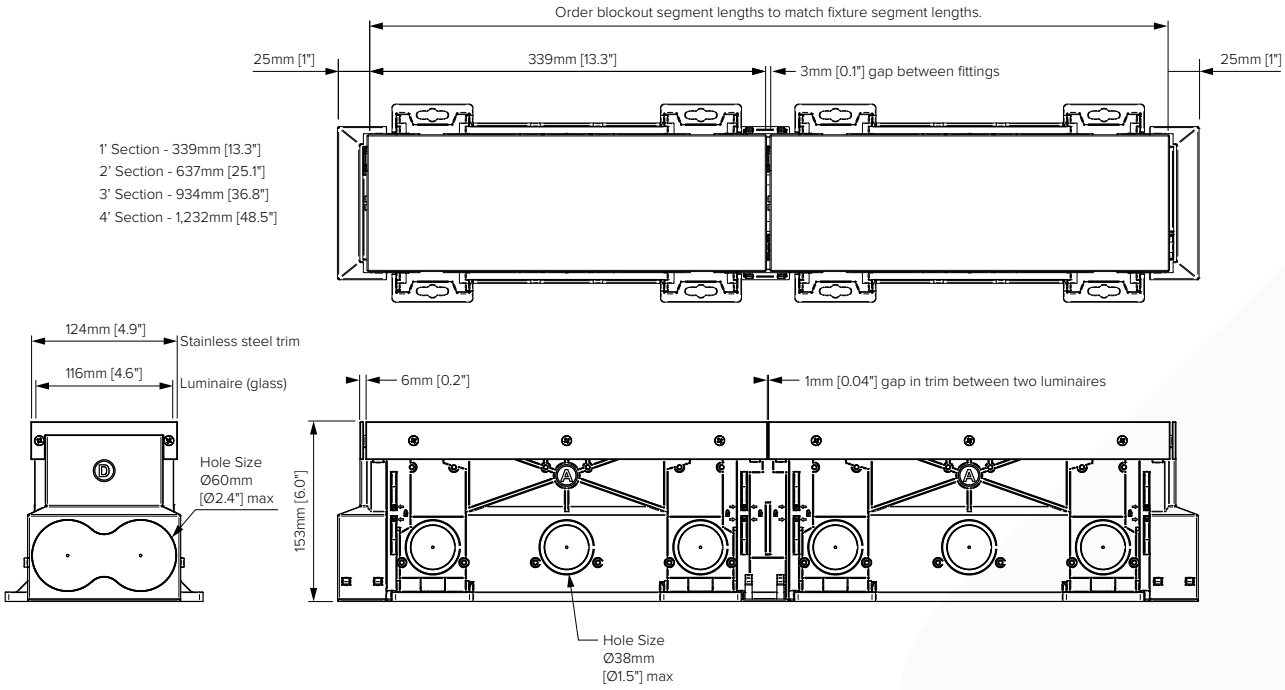

Installation

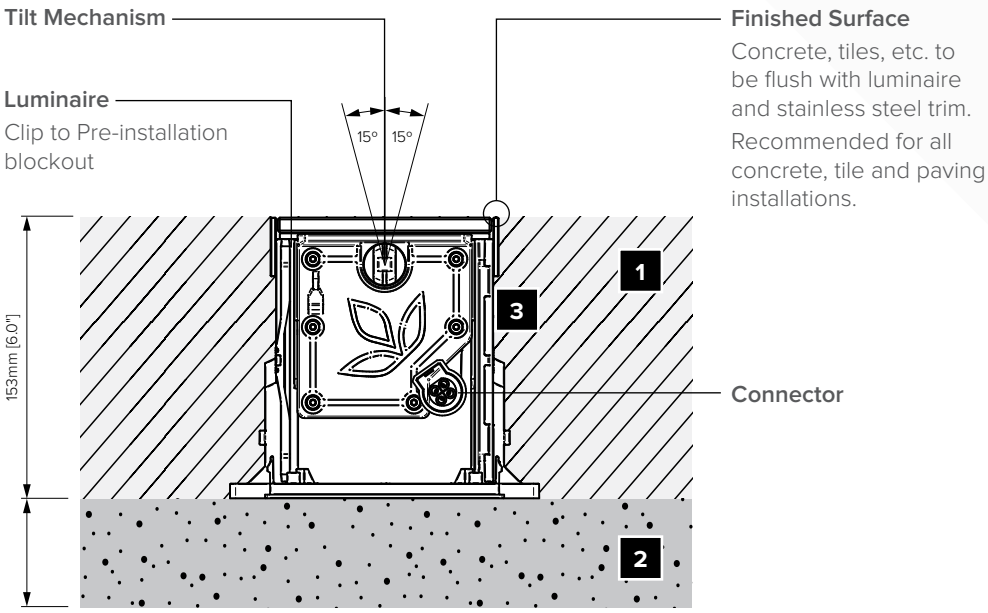

Installed Niche

1. Concrete / Gravel
2. Draining Aggregate
3. Niche Assembly

*Refer to installation instructions for more information.

LS3150	16W									

Power	Code
16W/ft	16W

Static White & Colour	Code
2,700 K [80 CRI]	827
3,000 K [80 CRI]	830
3,500 K [80 CRI]	835
4,000 K [80 CRI]	840
5,000 K [70 CRI]	750
Red	RED
Green	GRN
Blue	BLU

Dynamic Colour	Code
RGBA	4CA
RGBW	4CW
RGB	RGB[1]

(1) Available on request

Tunable White	Code
2,700 K - 6,500 K	2WT

Lens	Code
OptiClear™	A
GripGlass™	G

Connection Type	Code
Flexible cable, single entry, for connectorised installations	77
Flexible cable, double entry, for connectorised installations	73

Beam	Code
6°	VN
15°	NM
30°	ME
45°	WD
60°	WF
40° x 10°	NH
60° x 10°	LH
40° x 20°	MH
60° x 20°	WH

Glass Length	Code
1' - 339mm [13.3"]	1
2' - 637mm [25.1"]	2
3' - 934mm [36.8"]	3
4' - 1,232mm [48.5"]	4

Internal Shielding	Code
Full pitch	F
Half pitch	H
None	N

Input Voltage	Code
110-240V, 50/60Hz	01[1]
120-277V, 50/60Hz	09[2]

(1) International market

(2) North American market

Control	Code
Non-Dim	ND[1]
Powersync™	PS[2]

(1) For single colour, non-dimming applications only.

(2) Required for all dimming and colour changing applications. LS6540 Data Injector required - order separately

Beam Orientations

Beam Orientation for the "LH" and "MH" optical system

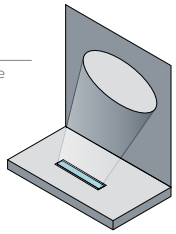

Pre Installation Blockout Kits

Start / Stand - Alone Section

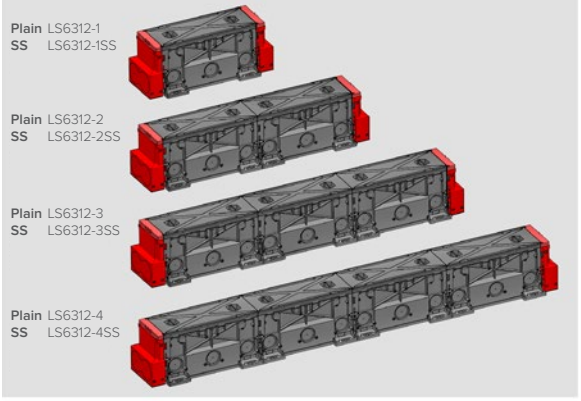

Middle / End Section

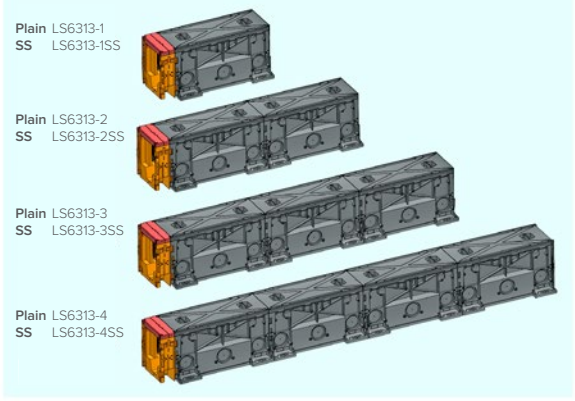

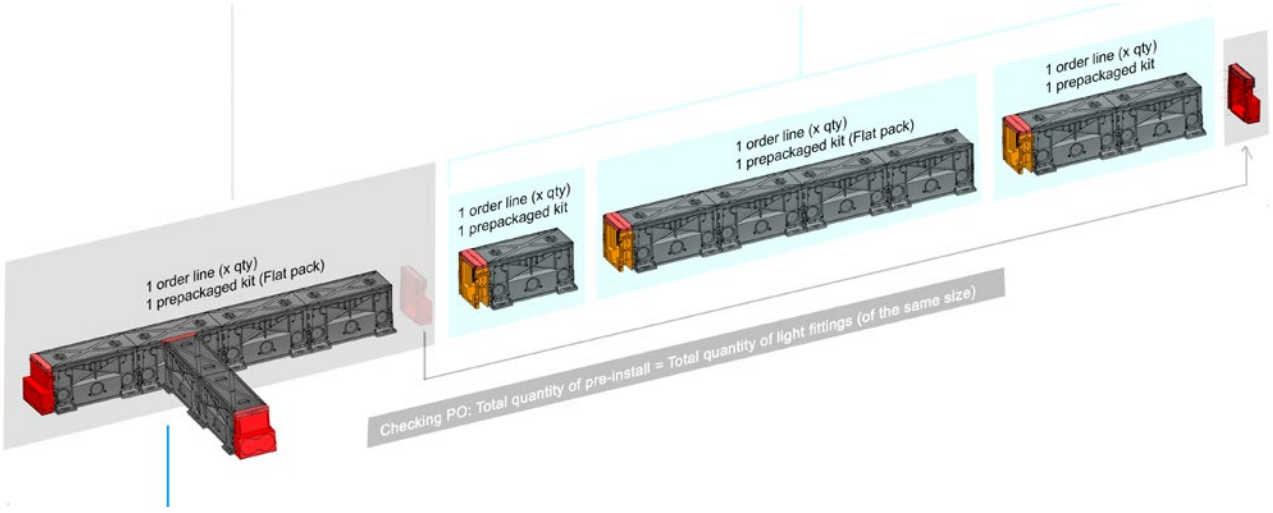

"T" / "L" Joiner

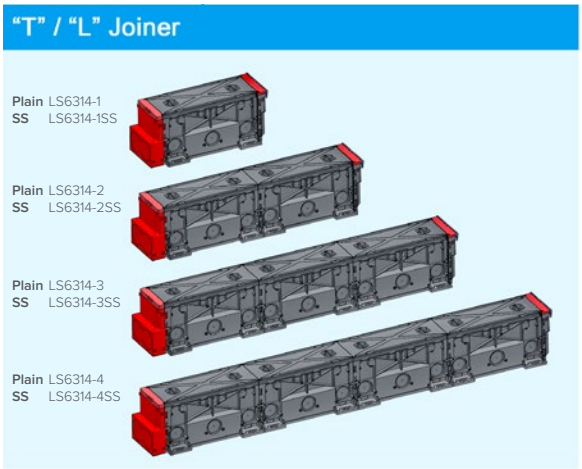

Use a 'T' or 'L' joiner kit to run a second run of luminaires perpendicular to the original run.

Runs can be extended using 'Middle / End Section' kit

Network Topology - PowerSync™ Dimmable

PowerSync™ Topology 1 - Single Trunk Cable

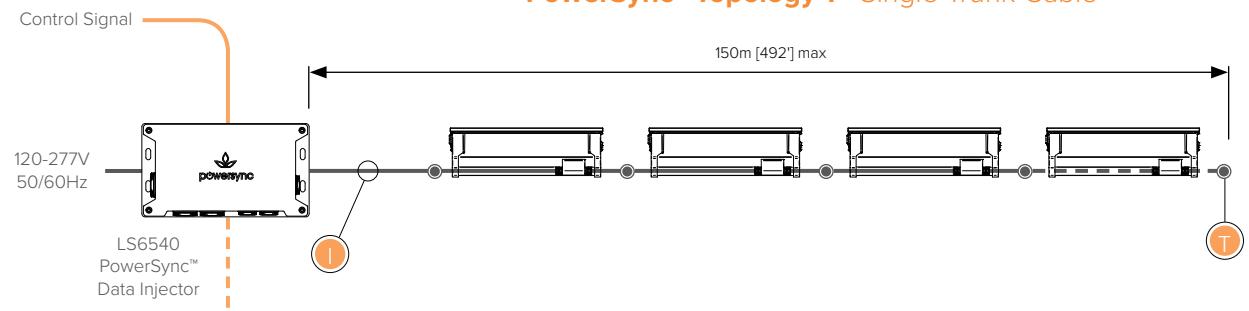

PowerSync™ Topology 2 - Split Trunk Cable

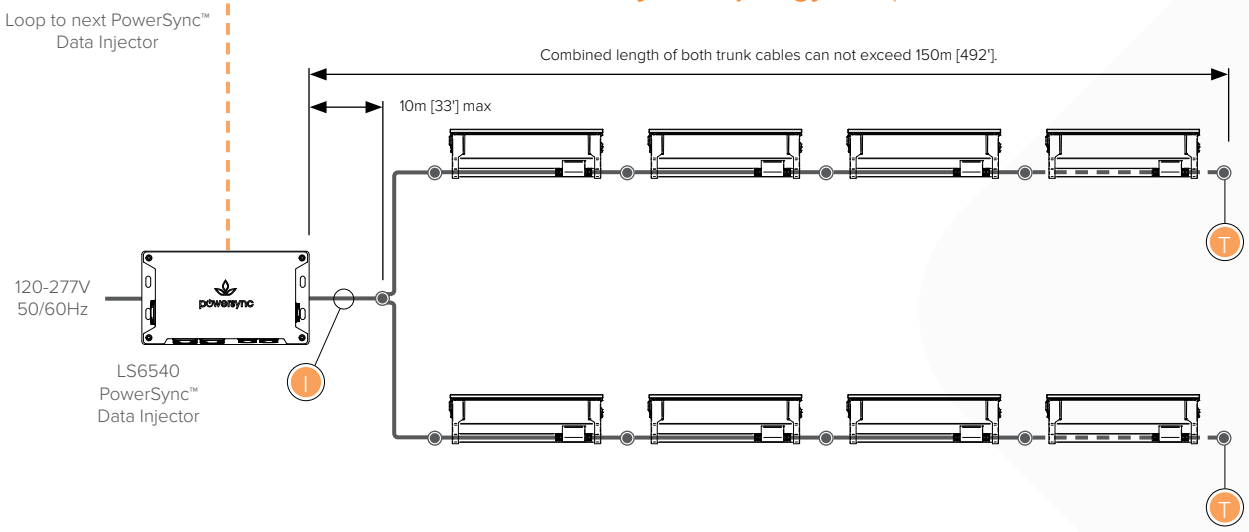

Up to 45 luminaires per run under the following conditions:

- Max total cable run length 150m (492') in up to two trunk cables
- For run lengths in excess of 30m (100'), the *data* wire gauge cannot exceed 14 AWG (2.5mm²)
- For run lengths up to 30m (100'), the *data* wire gauge is not governed
- Refer to 'Maximum Circuit Load' table for circuit limitations
- Always observe local electrical codes for branch circuit current limitations

Terminator

Use PowerSync™ terminator, supplied with leader cable to terminate last luminaire in chain.

Maximum Current

≤16.0A - International market
≤12.8A - North American market

Connection Type

Circuits are configured as connectorised. For details consult installation instructions and comply with local electrical codes.

Maximum Circuit Load

Maximum Number of Interconnected Fixtures							
Luminaire Length	LED Power	120V		240V		277V	
		12.8A	16A	12.8A	16A	12.8A	16A
1ft	16W	45	45	45	45	45	45
2ft	16W	40	45	45	45	45	45
3ft	16W	26	35	45	45	45	45
4ft	16W	20	26	40	45	45	45

Refer to PowerSync™ installation manual for maximum distance information and typology options.
All connectorised options in North America are limited to 12.8A branch circuit load.
For non-continuous runs contact factory for details.

NOTE: The above diagrams are intended to show electrical pathways between luminaires and ancillary device. These diagrams are not intended to show type or colour of cord / wire, luminaire input voltage rating, wire gauge or approved use of the cord / wire supplied with luminaires.

Network Topology - Non-Dimmable

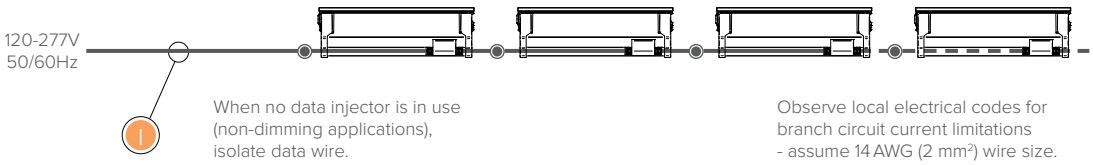

Up to 45 luminaires per run under the following conditions:

- Refer to 'Maximum Circuit Load' table for circuit limitations
- Always observe local electrical codes for branch circuit current limitations

Maximum Current

≤16.0A through cables and connectors supplied by Lumascape
≤12.8A applies to connectorised installations in North America

Connection Type

Circuits are configured as connectorised. For details consult installation instructions and comply with local electrical codes.

Maximum Circuit Load

Maximum Number of Interconnected Fixtures							
Luminaire Length	LED Power	120V		240V		277V	
		12.8A	16A	12.8A	16A	12.8A	16A
1ft	16W	45	45	45	45	45	45
2ft	16W	40	45	45	45	45	45
3ft	16W	26	35	45	45	45	45
4ft	16W	20	26	40	45	45	45

Refer to PowerSync™ installation manual for maximum distance information and typology options.
All connectorised options in North America are limited to 12.8A branch circuit load.
For non-continuous runs contact factory for details.

NOTE: The above diagrams are intended to show electrical pathways between luminaires and ancillary device. These diagrams are not intended to show type or colour of cord / wire, luminaire input voltage rating, wire gauge or approved use of the cord / wire supplied with luminaires.

powersync tm

Connectorised Accessories

Cables & Connectors (Connection Type 73 / 77 Only)

Leader & Jumper Cables - International Market	Code
Leader Cable 10m [32']	LS6402C-032
Leader Cable specify custom length in feet - 30m [98'] max.	LS6402C-xxx
Jumper Cable 0.3m [1'] fixture gap spacing	LS6404C-001
Jumper Cable 0.6m [2'] fixture gap spacing	LS6404C-002
Jumper Cable 1.2m [4'] fixture gap spacing	LS6404C-004
Jumper Cable 3m [10'] fixture gap spacing	LS6404C-010
Jumper Cable specify custom fixture gap spacing in feet - 30m [100'] max.	LS6404C-xxx

Leader & Jumper Cables - North America Market	Code
Leader Cable 15m [50']	LS6435U-050
Leader Cable specify custom length in feet - 30m [98'] max.	LS6435U-xxx
Jumper Cable 0.3m [1'] fixture gap spacing	LS6436U-001
Jumper Cable 0.6m [2'] fixture gap spacing	LS6436U-002
Jumper Cable 1.2m [4'] fixture gap spacing	LS6436U-004
Jumper Cable 3m [10'] fixture gap spacing	LS6436U-010
Jumper Cable specify custom fixture gap spacing in feet - 30m [100'] max.	LS6436U-xxx

All connectorised options in North America are limited to 12.8 A branch circuit load.

Terminator	Code
Terminator for use with connectorised luminaires	LS6417

Note: A terminator ships with every leader cable. Order separately for spare parts and split runs only.

Splitters	Code
Y - Connector	LS6245

Wire Colours & Designations

Mains Voltage - International Market

Designation	Colour
Active	Brown
Neutral	Blue
Earth	Green / Yellow
Data	Black

Mains Voltage - North American Market

Designation	Colour
Active	Black
Neutral	White
Earth	Green / Yellow
Data	Grey [or Red]